TECHNICAL INFORMATION

Model No. ► BBO140/ BBO180

Description ► 125mm (5") Cordless Random Orbit Sanders

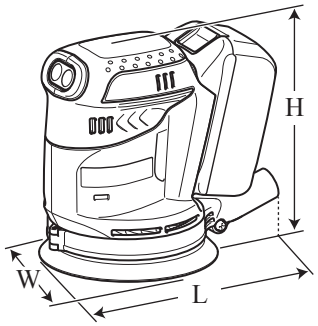

The image is model BBO180.

Dimensions: mm (")	
Length (L)	175 (6-7/8)
Width (W)	123 (4-7/8)
Height (H)	153 (6)

CONCEPT AND MAIN APPLICATIONS

Model BBO140/ BBO180 have been developed as Makita's first cordless random orbit sanders powered by Li-ion batteries; 14.4V-3.0Ah BL1430*2/ 18V-3.0Ah BL1830*3.
Their main features are:

- Compact design with a short height and a lower center of gravity for easier handling and more maneuverability
- Simple to operate electronic push button switch with 3-speed settings
- Ergonomically best possible grip design for comfortable handling
- Excellent performance as powerful as AC model gives high productivity.

*2: Not compatible with BL1415, BL1430A
*3: Not compatible with BL1815

These products are available in the following variations.

Model No.	Charger	Battery		Battery cover	Plastic carrying case	Systainer case	Tote bag	Offered to
		Type	Quantity					
BBO140Z	No	No	No	No	No	No	No	All countries except North and Central American countries
BBO140RFE	DC18RC	BL1430	2	1	Yes	No	No	
BBO180Z	No	No	No	No	No	No	No	
BBO180ZX	No	No	No	No	No	Yes	No	
BBO180RFE	DC18RC	BL1830	2	1	Yes	No	No	
BBO180RFX	DC18RC	BL1830	2	1	No	Yes	No	
---	No	No	No	No	No	No	No	North and Central American countries
---	DC18RA	BL1830	2	1	No	No	Yes	

All models also include the accessories listed below in "Standard equipment".

► Specification

Specification / Model		BBO140	BBO180
Battery	Cell	Li-ion	
	Voltage: V	14.4	18
	Capacity: Ah	3.0	
	Energy capacity: W	44	54
	Charging time (approx.): min.	22 with DC18RC (DC18RA*1)	
Max. output: W		180	190
Orbits per minute: opm=min-1		7,000/ 9,500/ 11,000	
Sanding strokes: spm=min-1		14,000/ 19,000/ 22,000	
Paper fastening system		Hook & Loop	
Pad diameter: mm (")		123 (4-7/8)	
Abrasive disc diameter: mm (")		125 (5)	
Orbit diameter: mm (")		2.8 (1/8)	
Variable speed control		3-stage push button	
Pad brake		Yes	
Weight according to EPTA-Procedure 01/2003*4: kg (lbs)		1.6 (3.4)	1.7 (3.6)

*4 with battery

► Standard equipment

Abrasive disc 125-120 ..... 1 Dust bag or Dust box ..... 1 Plastic carrying case ..... 1 (for some countries only)

Note: The standard equipment shown above may vary by country.

► Optional accessories

Abrasive discs 125-60/80/120/180/240
Sponge pad 125
Wool pad 140
Felt pad 125
Battery BL1430 for model BBO140
BL1830 for model BBO180
Fast charger DC18RA (for USA, Canada, Guam, Panama, Mexico, Colombia)
Fast charger DC18RC (All countries except the countries above)
Charger DC24SC/ DC18SD
Automotive charger DC18SE

Repair

CAUTION: Repair the machine in accordance with "Instruction manual" or "Safety instructions".

[1] NECESSARY REPAIRING TOOLS

Code No.	Description	Use for
1R045	Gear extractor (large)	removing/ mounting Spindle from/ to Motor bracket
1R291	Retaining ring S and R pliers	removing/ mounting Retaining ring S-7 from/ to Spindle
781036-5	Wrench 10	removing/ mounting Pulley 7.5-24.1 from/ to DC motor

[2] LUBRICATION

No need to lubricate.

[3] DISASSEMBLY/ASSEMBLY

[3] -1. Fan 88, DC motor and Pulleys

DISASSEMBLING

(1) Disassemble Motor section from Housing set as drawn in **Fig. 1**.

Fig. 1

1. While holding Pad 123 firmly by hand, unscrew three M4x16 Pan head screws. Then remove Pad 123 and Bearing box cover from Housing set.
Note: Bearing box cover may be removed together with Pad 123.

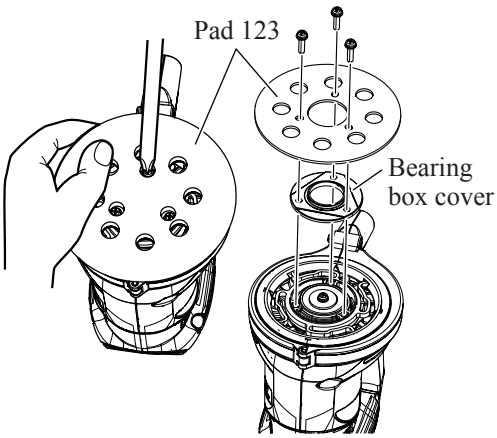

2. Remove Brake ring form Housing set.

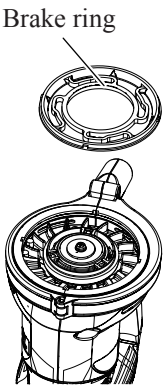

3. Unscrew M4x20 Pan head screw and remove Skirt set (R & L) from Housing set.

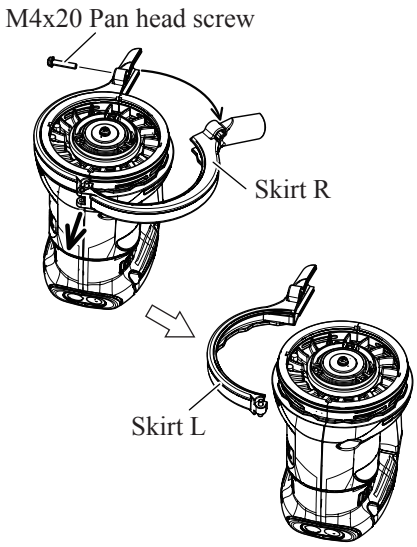

4. While blocking Fan 88 with Slotted screwdriver inserted through the vent of Housing set, remove M4x16 Pan head screw. Then remove Flat washer 4, Bearing box with Ball bearing 6202DDW and Flat washer 15 from Housing set.

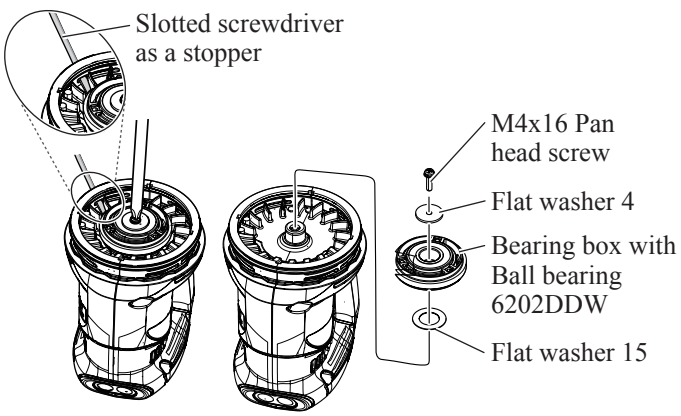

5. Remove Housing R by unscrewing five 4x18 Tapping screws. And then remove Motor section from Housing L.

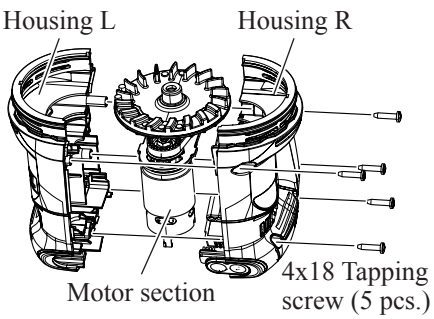

Repair

[3] DISASSEMBLY/ASSEMBLY

[3] -1. Fan 88, DC motor and Pulleys (cont.)

DISASSEMBLING

(2) Fan 88, Synchro belt 6-174, Pulley 7.5-40.3, Retaining ring S-7 and two Ball bearings are disassembled from Spindle as drawn in **Fig. 2**.

Fig. 2

1. Remove Fan 88, Synchro belt 6-174 and Pulley 7.5-40.3 from Spindle.

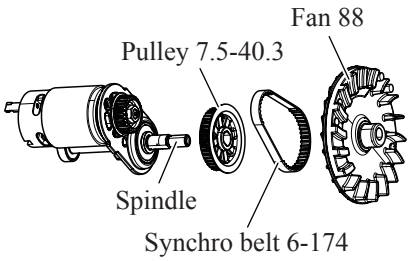

2. Remove Spindle section (including Ball bearings 607ZZ & 629DDW and Retaining ring S-7) with 1R045 from Motor bracket.

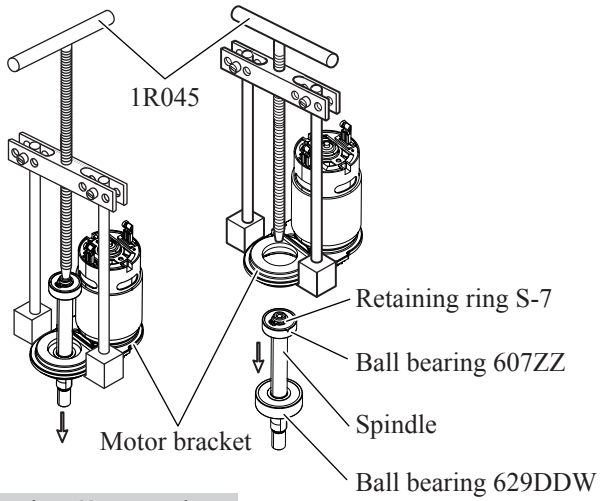

3. Remove Retaining ring S-7 with 1R291.

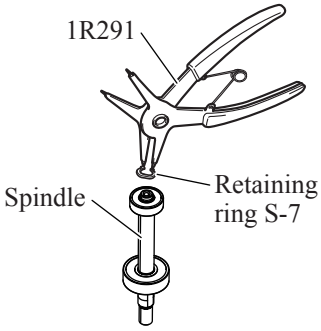

4. Remove Ball bearing 607ZZ and Ball bearing 629DDW from Spindle.

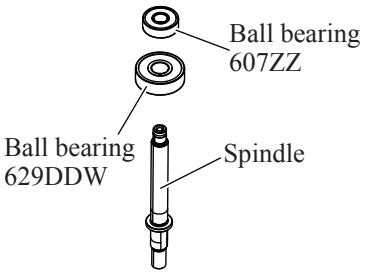

(3) Separate DC motor from Motor bracket as drawn in **Fig. 3**.

Fig. 3

1. While holding flat portion of DC motor shaft with Wrench 10, unscrew M6 Hex nut counterclockwise with Socket wrench 10. Pulley 7.5-24.1 is now removed from DC motor.

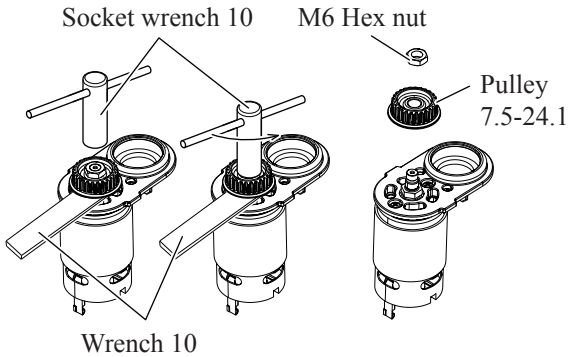

2. Remove Motor bracket from DC motor by unscrewing two M3x8 Pan head screws.

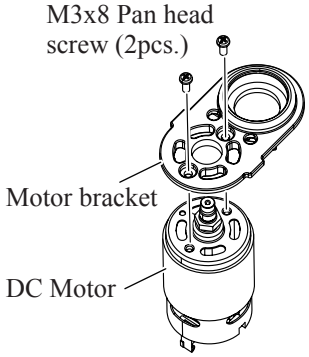

Repair

[3] DISASSEMBLY/ASSEMBLY
[3] -1. Fan 88, DC motor and Pulleys (cont.)

ASSEMBLING

Note: Assemble Fan 88, DC motor and Pulleys by reversing the disassembly procedure. (Refer to **Figs. 3**, **2** and **1**)

(1) Assemble DC motor to Motor bracket as drawn in **Fig. 4**.

Fig. 4

1. While aligning the projection on Motor bracket to the hole of DC motor, mount DC Motor to Motor bracket.

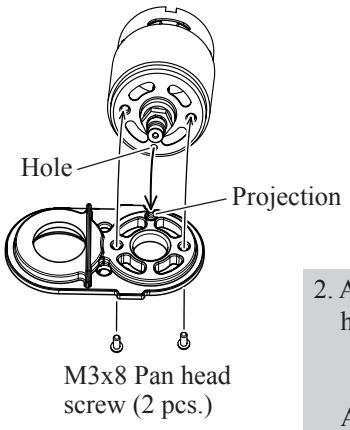

2. Apply either of the following adhesives to the thread of M3x8 Pan head screws if the same screws are reused.
   * **ThreeBond 1342**
   * **Loctite 242**

   And fasten DC motor to Motor bracket with two Pan head screws.

(2) Assemble Pulleys as drawn in **Fig. 5**.

Fig. 5

1. Mount Pulley 7.5-24.1 to DC motor while facing its brim portion to Motor bracket.

2. Assemble Spindle to Motor bracket. Then mount Pulley 7.5-40.3 to Spindle while facing its brim portion to the opposite side of Motor bracket.

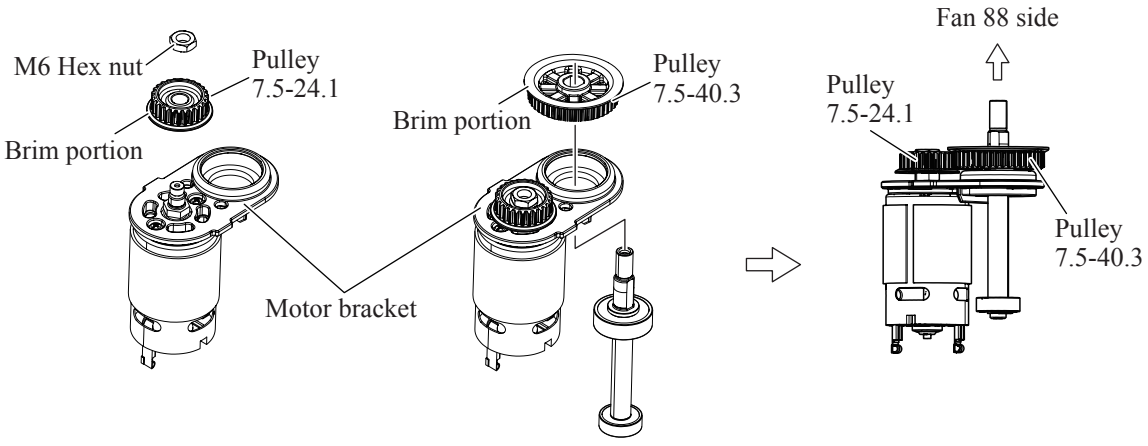

Repair

[3] DISASSEMBLY/ASSEMBLY
[3] -1. Fan 88, DC motor and Pulleys (cont.)

ASSEMBLING

(3) Assemble Brake ring to Housing set as drawn in **Fig. 6**.

Fig. 6

Mount Brake ring to Housing set while aligning four projections on Brake ring to four notches on Housing set.

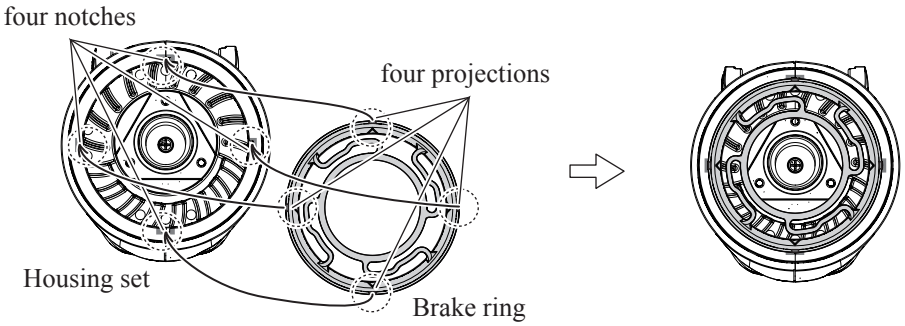

(4) Assemble Skirt set as drawn in **Fig. 7**.

Fig. 7

1. Set Skirt L to Housing set while fitting its rib to the groove on Housing set.

2. First, join Skirt R with Skirt L at the hinge portion. And then mount Skirt R to Housing set while fitting its rib to the groove on Housing set.

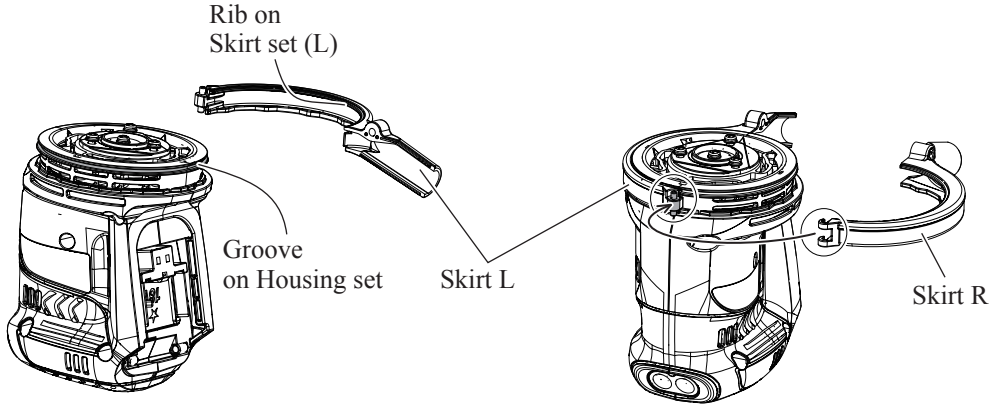

3. Fasten Skirt set (L & R) with M4x20 Pan head screw.

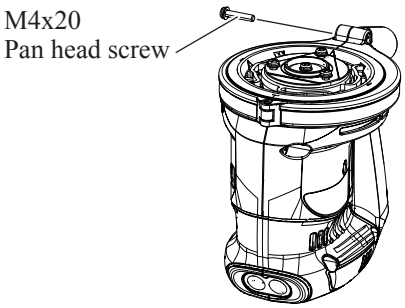

Circuit diagram

Fig. D-1

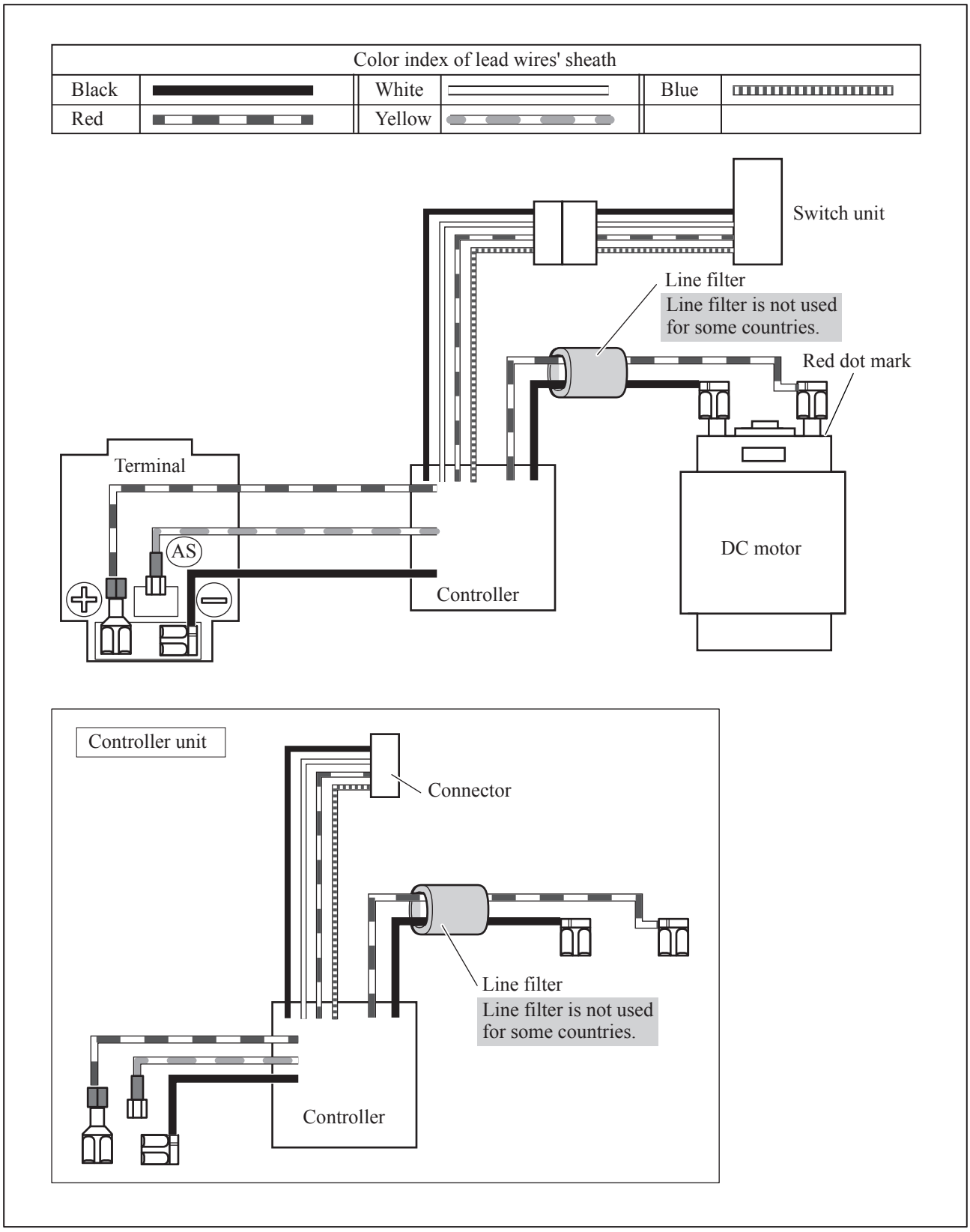

Wiring diagram

Fig. D-2

Wiring to DC motor

While facing the wire connecting portions of Receptacles to Housing L side, connect Lead wire (red) receptacle to the terminal with **Red dot mark** and Lead wire (black) receptacle to the other terminal.

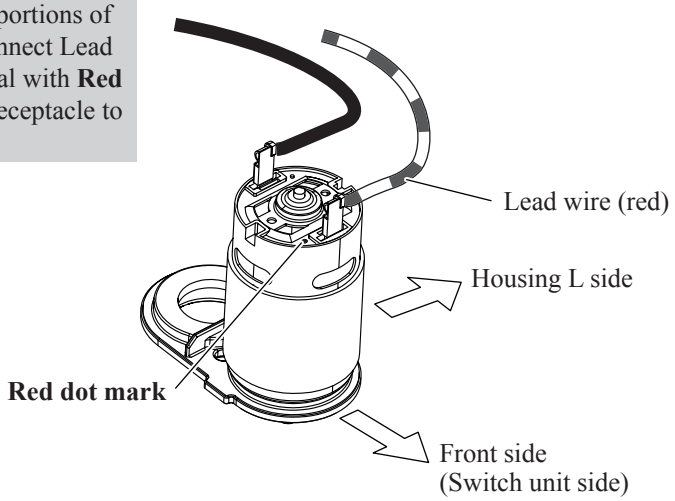

Fig. D-3

Wiring to Terminal

The Flag connector with Lead wire (black) has to be connected so that its wire connecting portion is located over **(-) pole mark**.

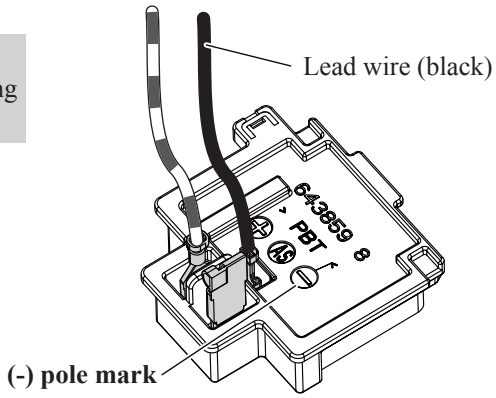

Wiring diagram
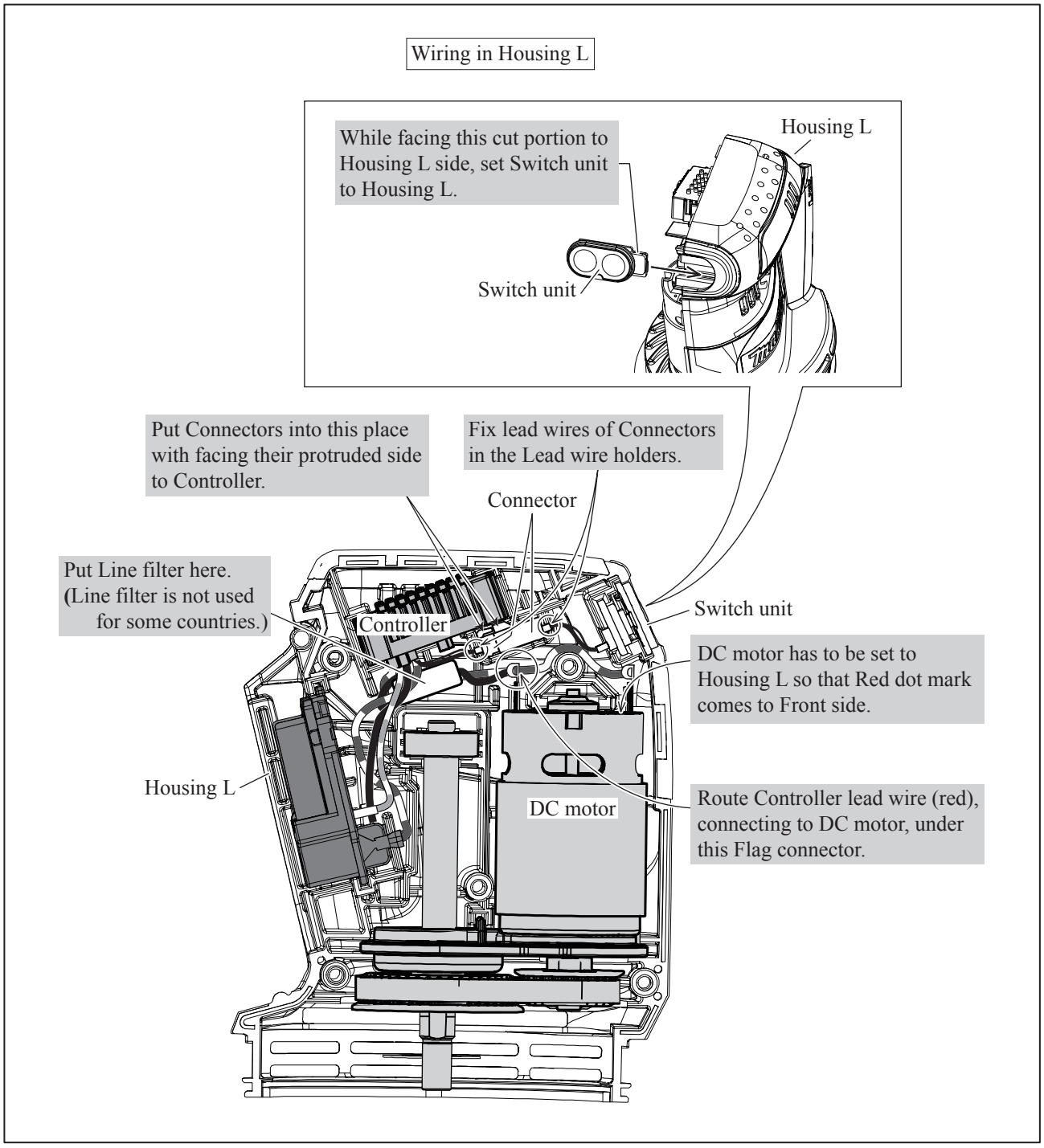
Fig. D-4